VARIOKOFFER SET X-CASE X30 CARBONOPTIK

Variokoffer Set X-Case X30 I Set de valises Vario X-CASE X30 I Juego de maletas Vario X-CASE X30 I Set valigie Vario X-CASE X30

Art.-Nr: **30185-XXX**



WARNING!

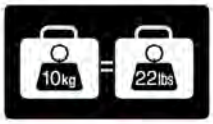

MAXIMUM WEIGHT



MAXIMUM SPEED, CHECK LOCAL LAWS.



ALWAYS SECURE AND LOCK PRODUCTS.



ONLY USE RECOMMENDED CLEANING PRODUCTS.



CASES ARE NOT DESIGNED TO PROTECT FRAGILE OBJECTS.



1 M. MINIMUM DISTANCE WITH POWER WASHER.

PFLEGE UND WARTUNG
CARE AND MAINTENANCE
ENTRETIEN ET MAINTENANCE

DEA International Poitzmeier Co.

ACCESORIES
OPTIONAL

Art.-Nr: **43747-302** INNENTASCHENSET
INNER POCKET SET
PAIRE DE SACOCHES INTÉRIEURES



Art.-Nr: **30164-200** CODIERBARE SCHLÖSSER
CODED LOCKS
SERRURES CODÉES



Art.-Nr: **30187-002** CODIERBARE SCHLÖSSER
CODED LOCKS
SERRURES CODÉES



INCLUDED

INNENNETZ
INNER NET
FILET INTÉRIEUR



P&A International
Peitzmeier Co.

Fassungsvermögen 1 modularer Helm I Modular Helmet 1 capacity I I Capacity of 1 modular helmet





Wunderlich
P and A International
Peitzmeier Co.

OPEN

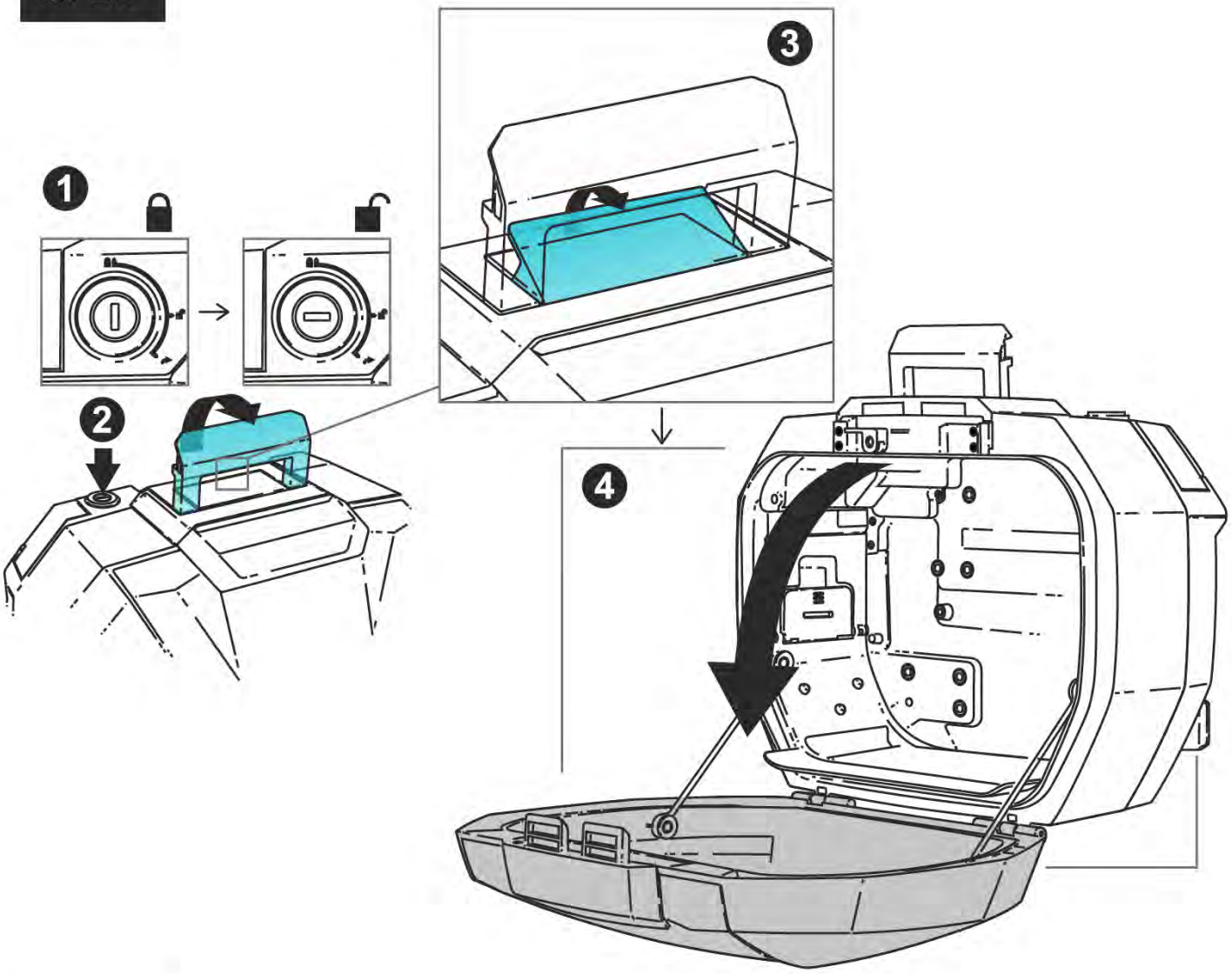

CLOSE

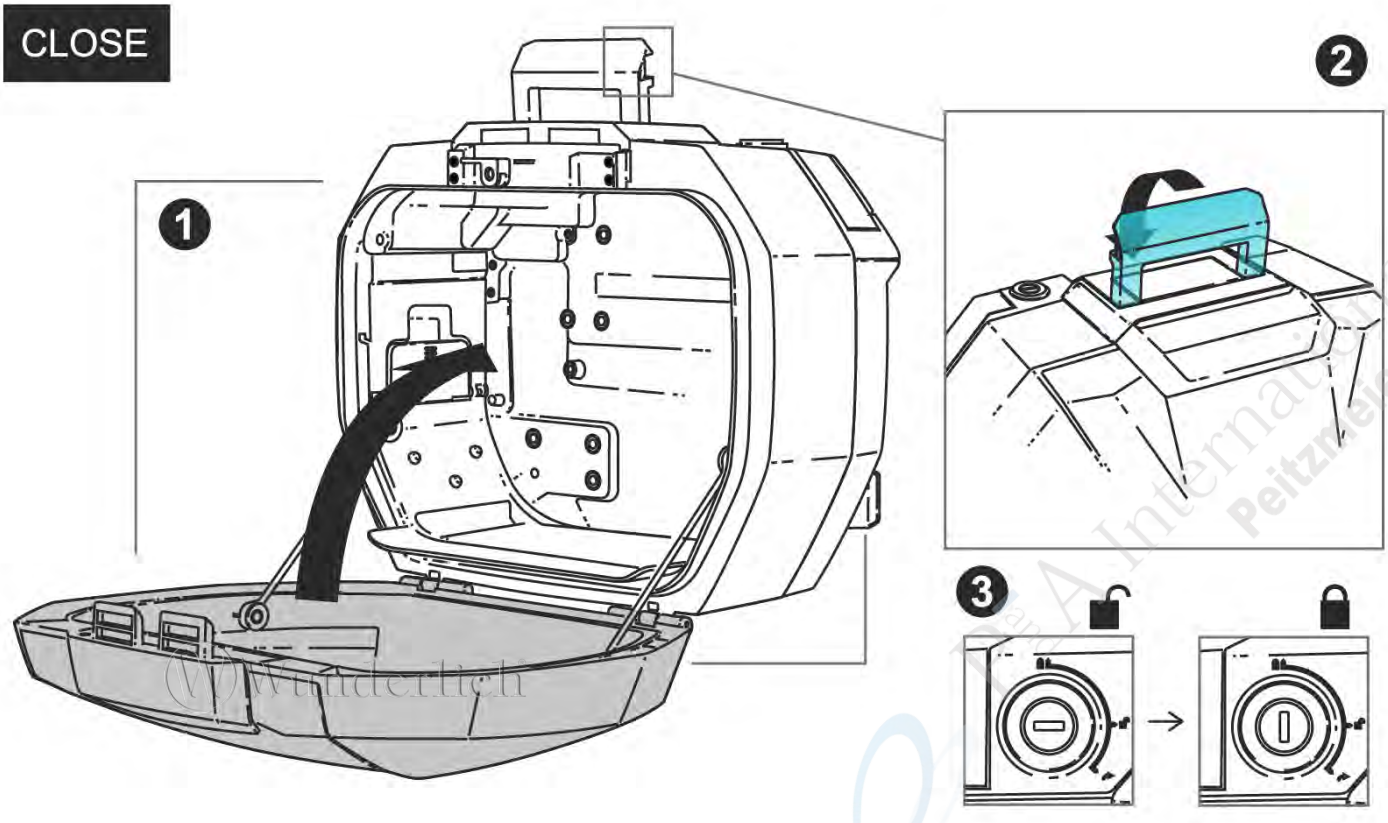

Wunderlich
Peitzmeier Co.

VERGRÖßERN
EXPAND
ÉLARGIR

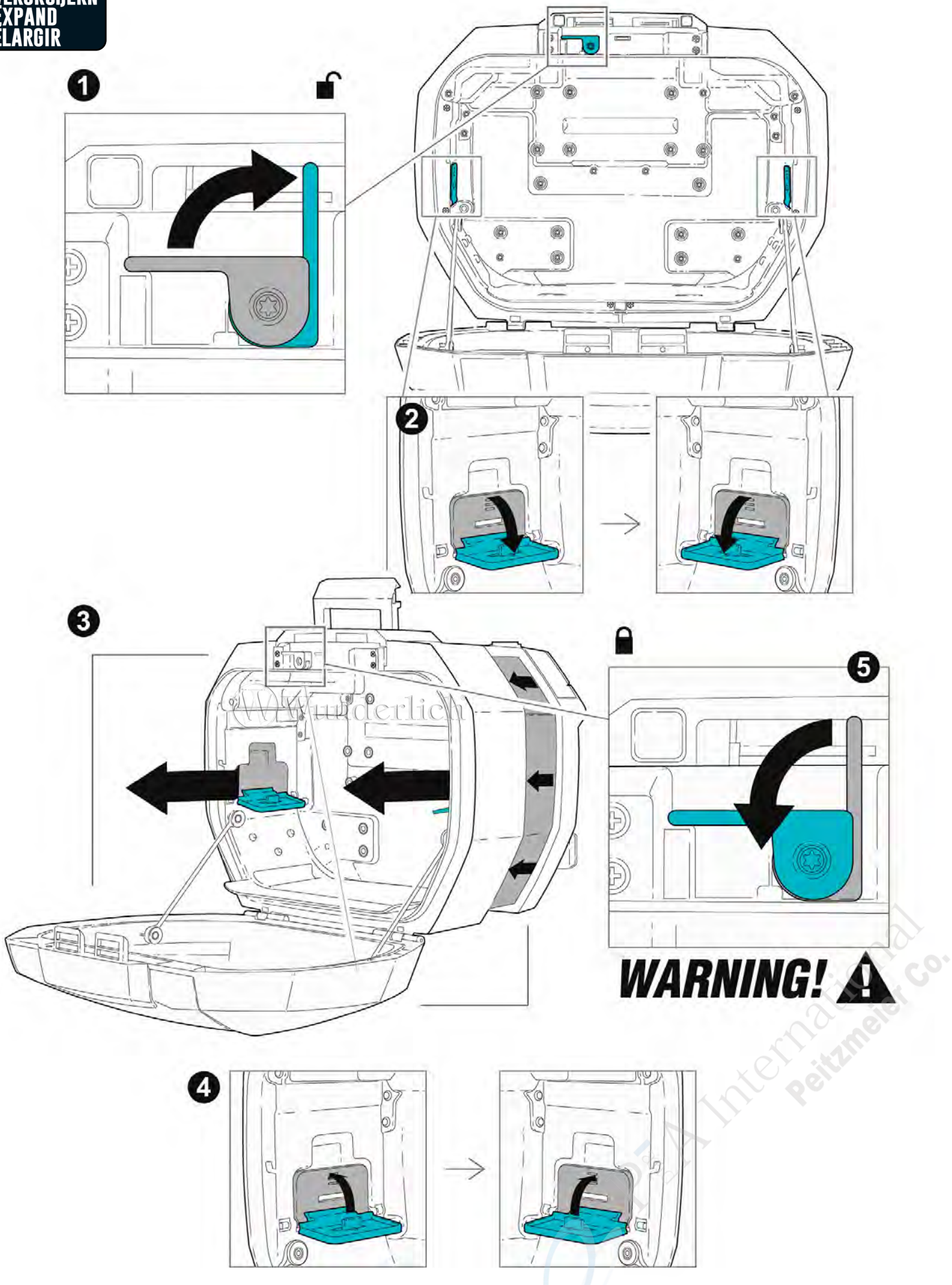

Wunderlich

VERKLEINERN
DOWNSIZE
RÉDUIRE

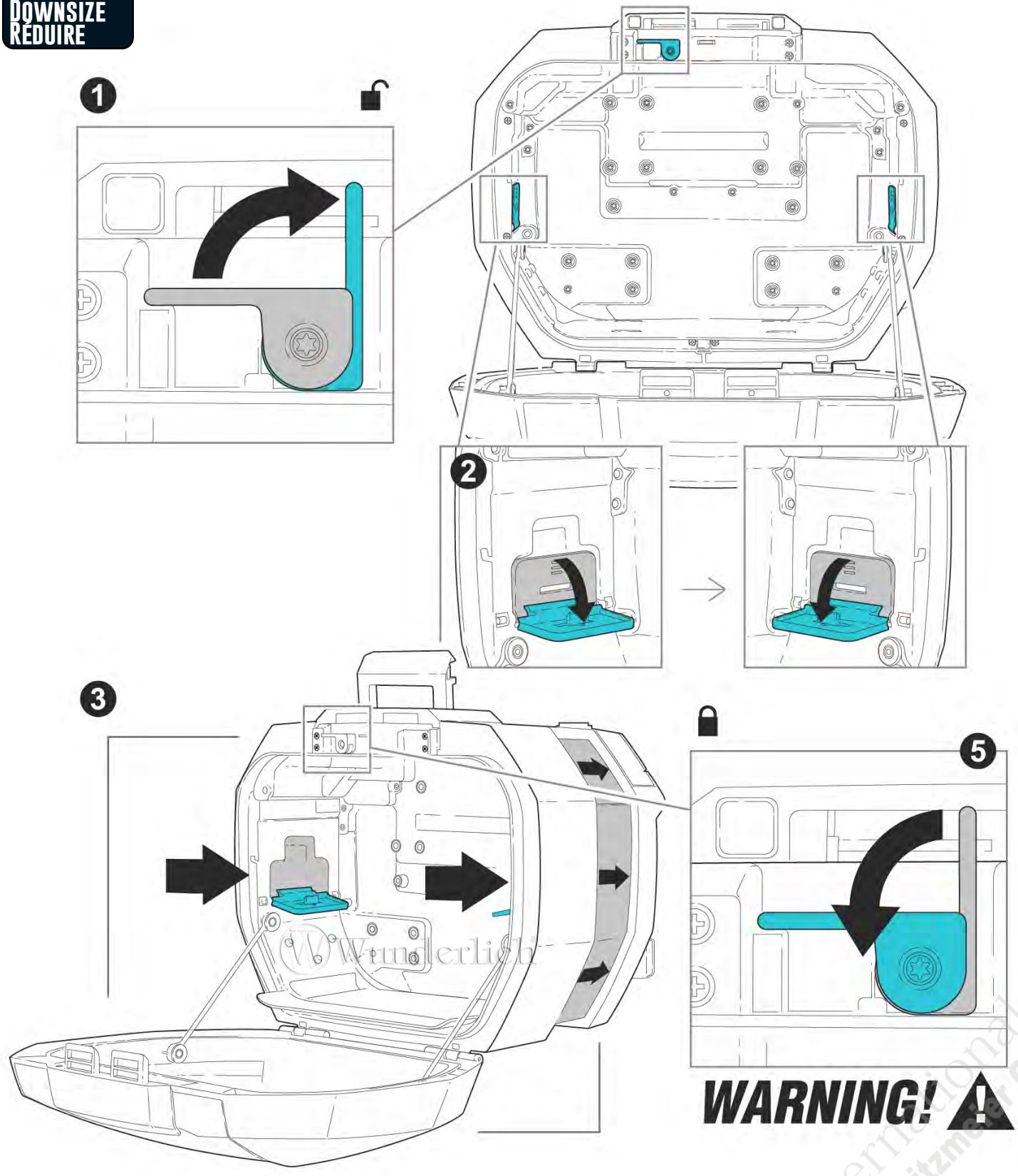

Wunderlich
Peitzmeier International

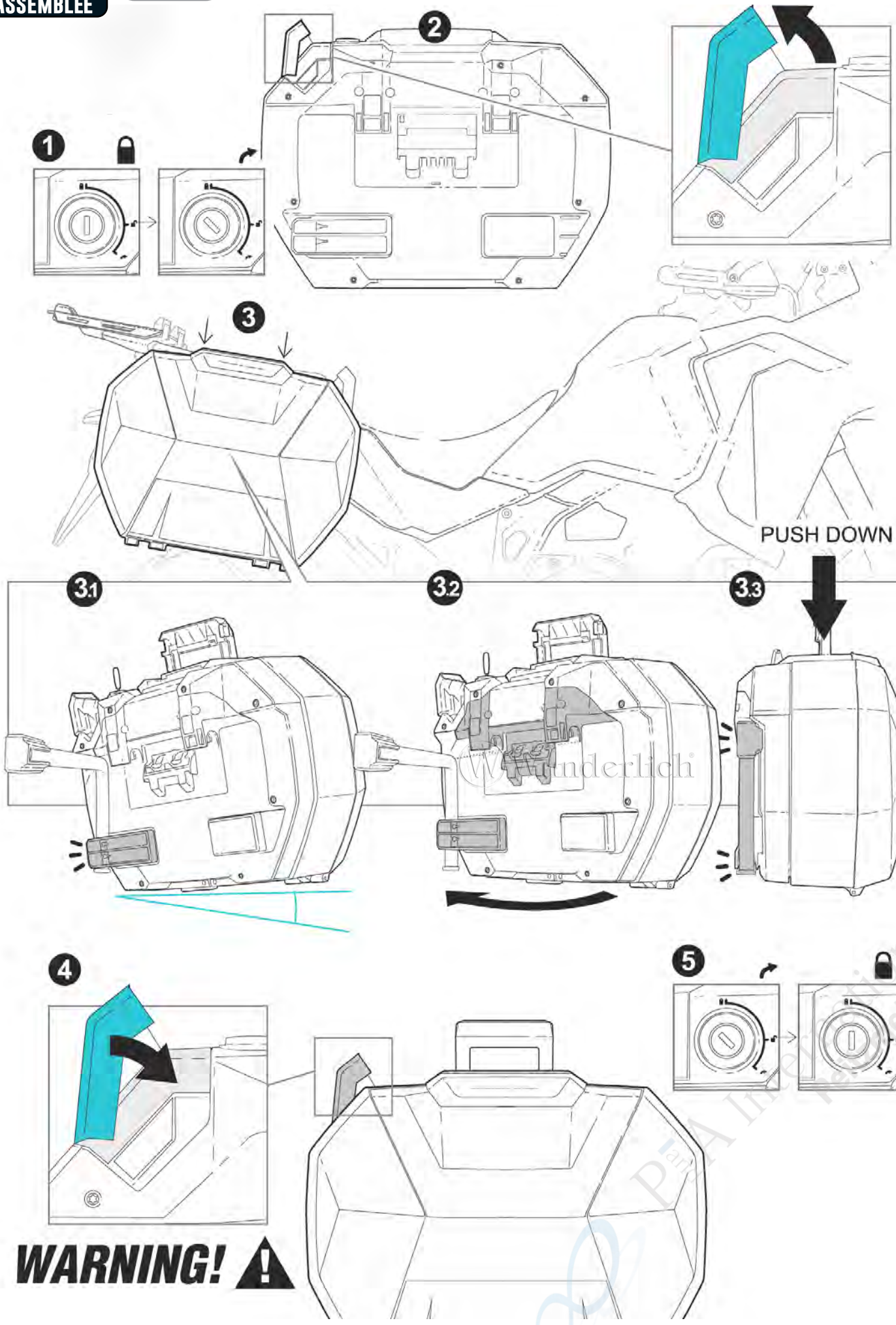

PAA International
Peter Meier Co.

MONTAGE
ASSEMBLY
ASSEMBLÉE

X-Rack light

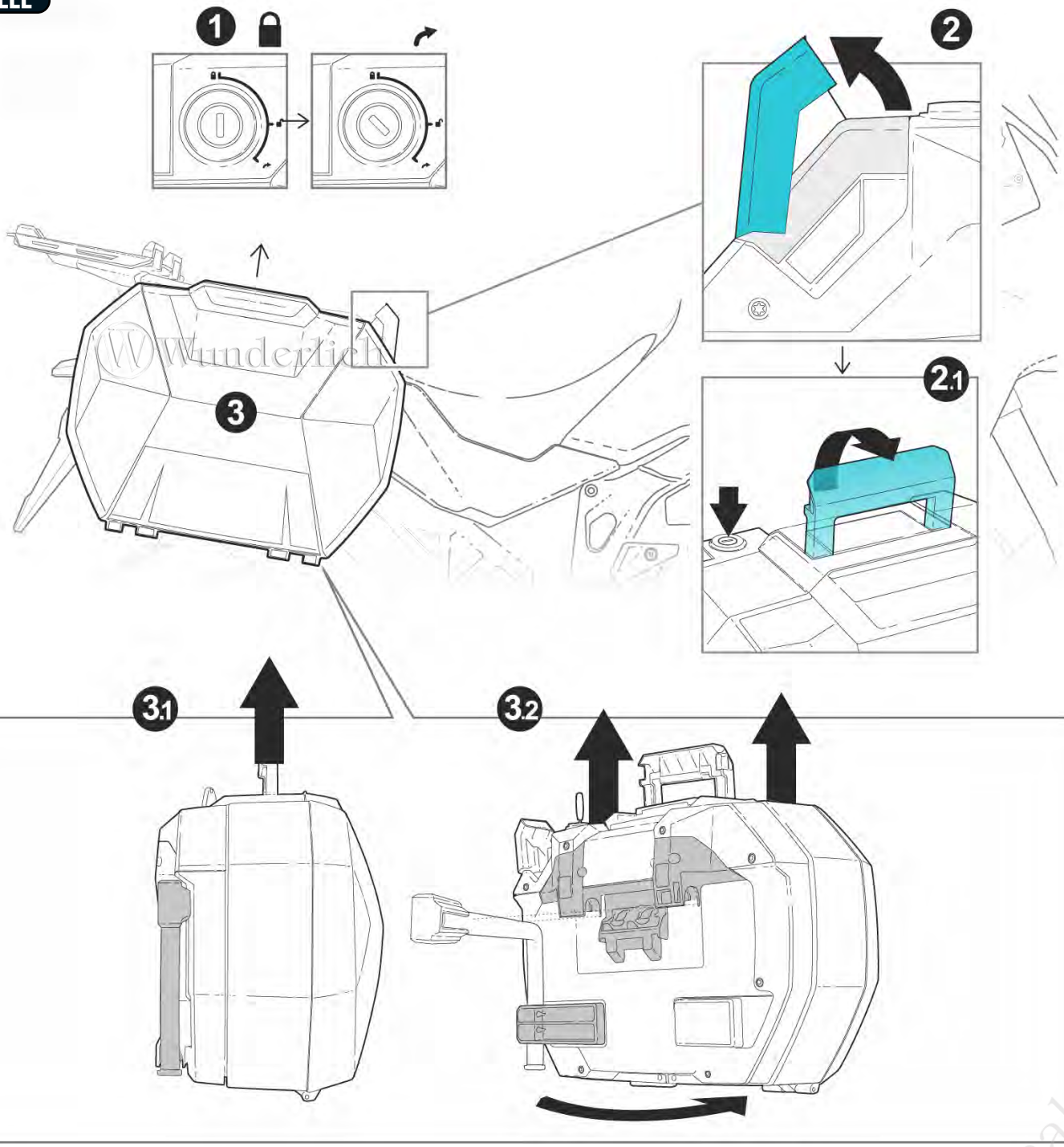

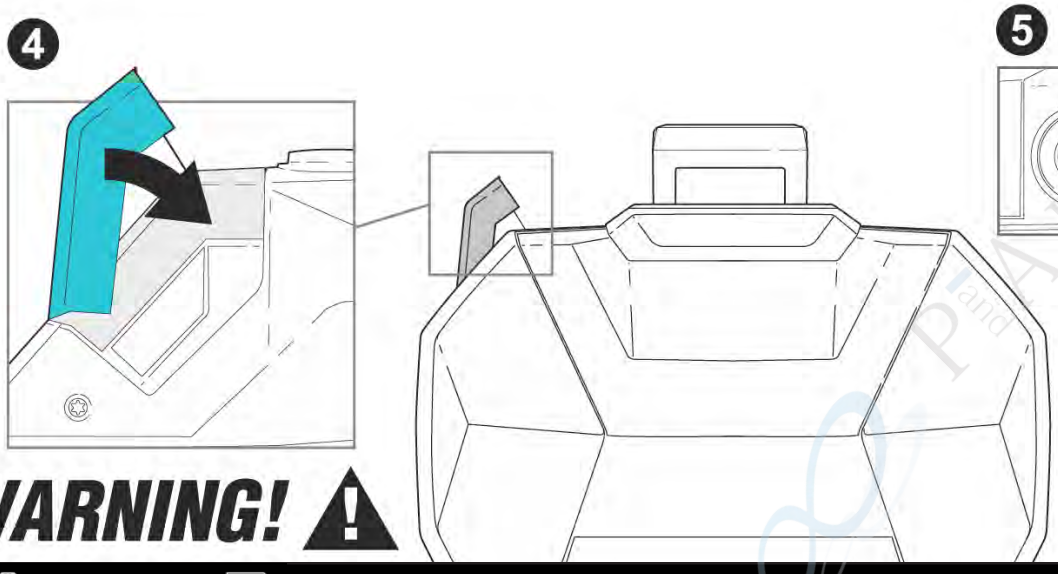

WARNING!

Wunderlich

Wunderlich GmbH I Joseph-von-Fraunhofer-Str. 6-8 I DE-53501 Grafschaft-Ringen I info@wunderlich.de I www.wunderlich.de I Tel.: +492641-3082-0

ÉLÉMENTS D'EMBALLAGE
PAP
Wunderlich

Adapter Variokoffer x30 auf X-Rack

Adapter Variocase x30 to X-Rack I Adaptateur Variocase x30 à X-Rack I Adaptador Variocase x30 a X-Rack I Adattatore Variocase x30 a X-Rack

Art.-Nr: **30187-002**





P&A International
Peitzmeier Co.

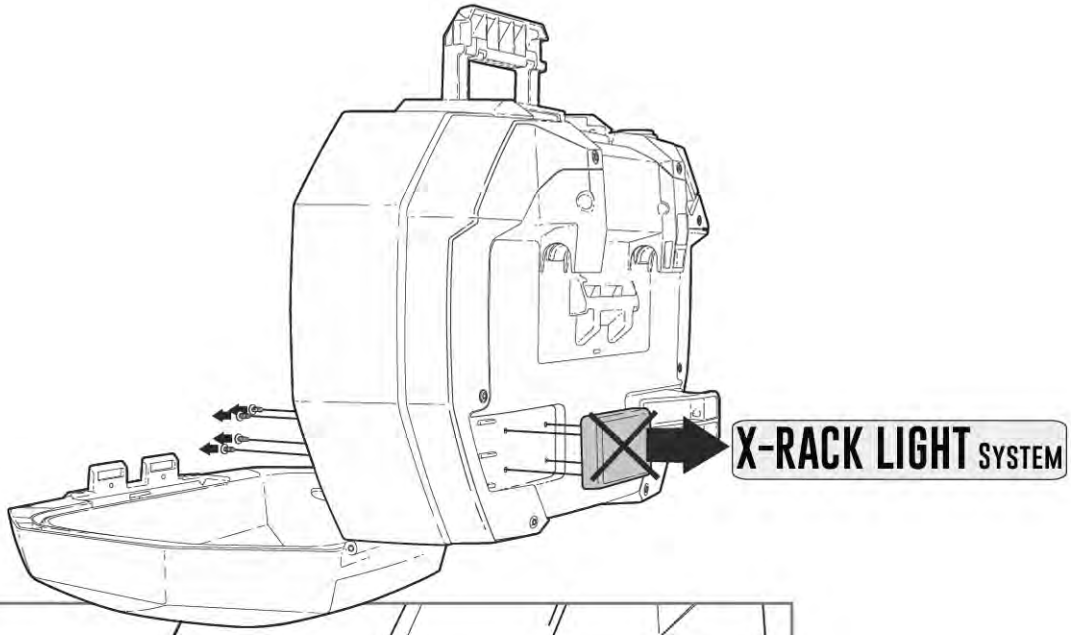

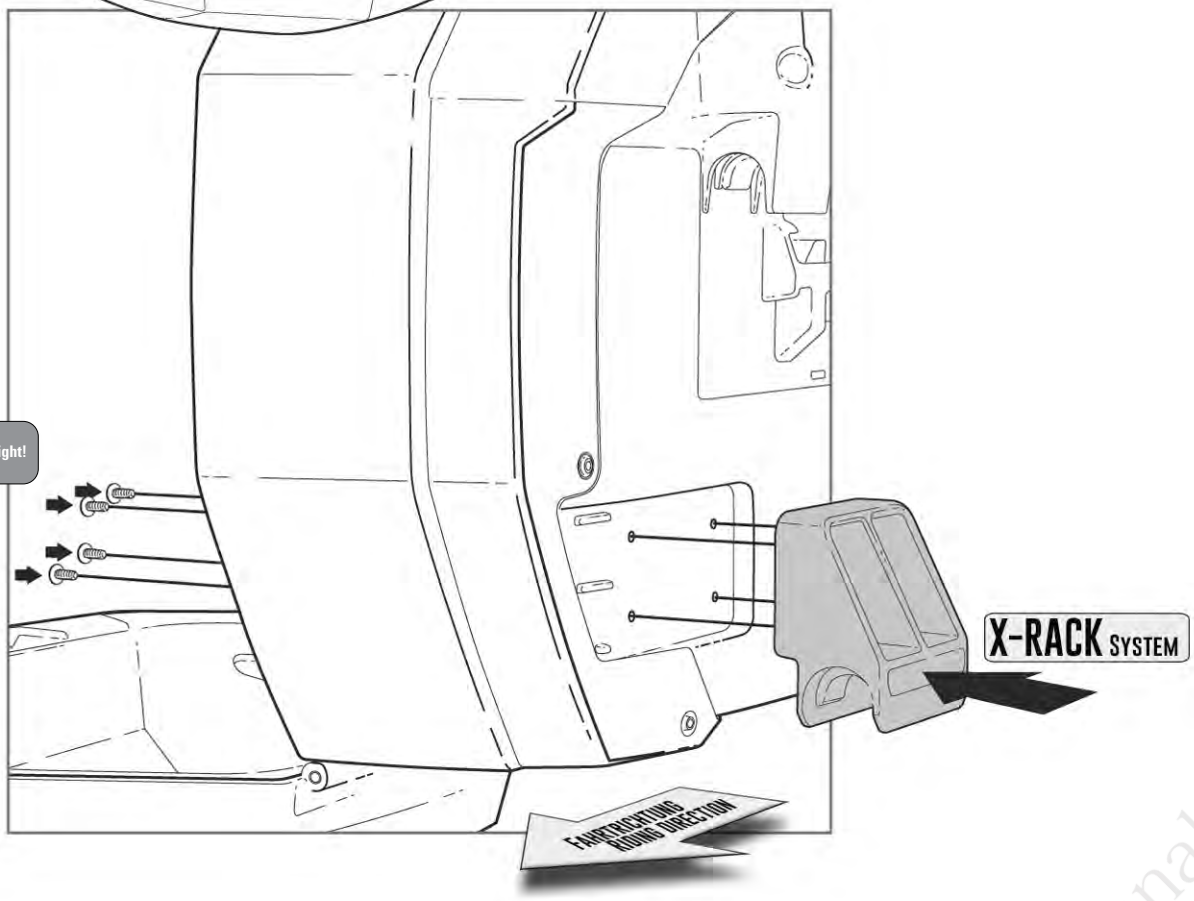

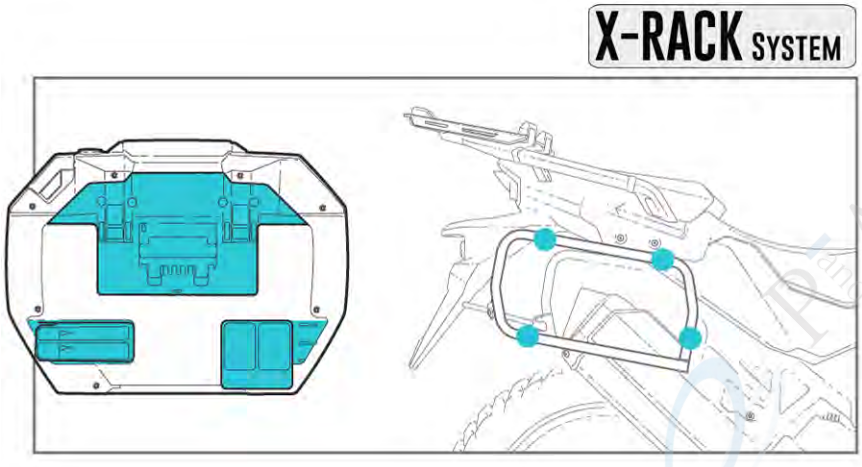

PEA International
Peitzmeier Co.

Schließzylinder in X-Case x30 einbauen

Install the lock cylinder in X-Case X30 I Installer le cylindre de fermeture dans le X-Case x30 I Instalar cilindro de cierre en X-Case x30 I Installare il cilindro di chiusura in X-Case x30

Art.-Nr: **30164-200**

1



2

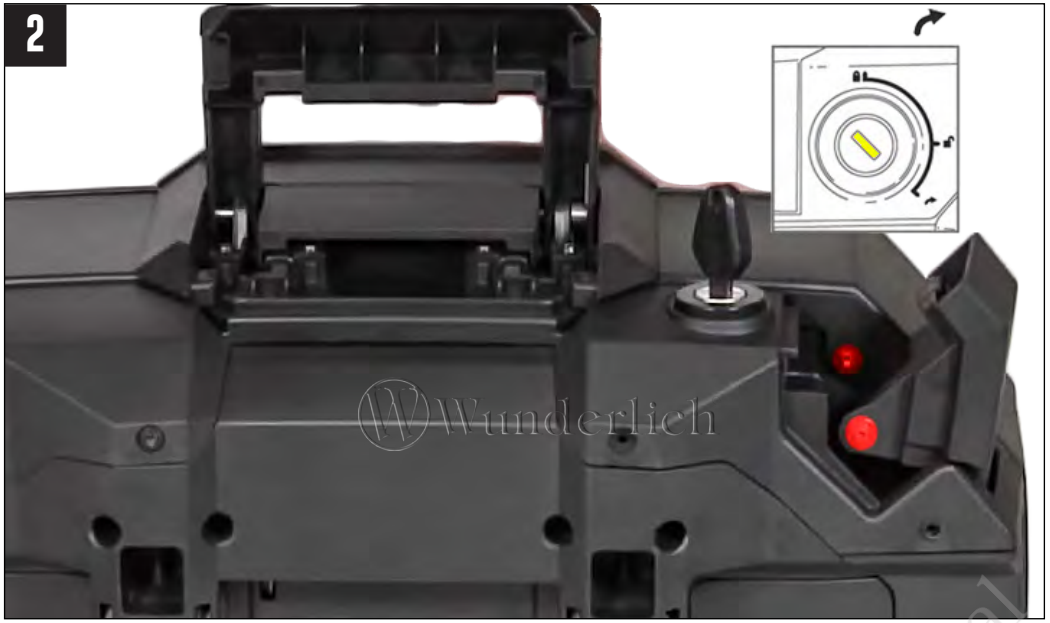

3.1

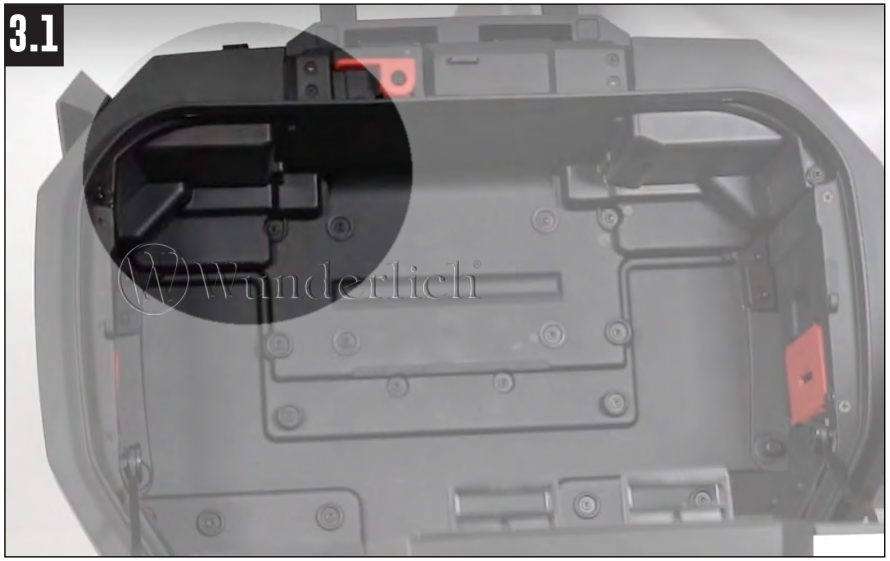

3.2



P and A International Petzmeier Co.

4



5



6



7

Bitte codieren Sie erst das Schloss, bevor es eingebaut wird.
Please code the lock before installing it.
Veuillez coder la serrure avant de l'installer.



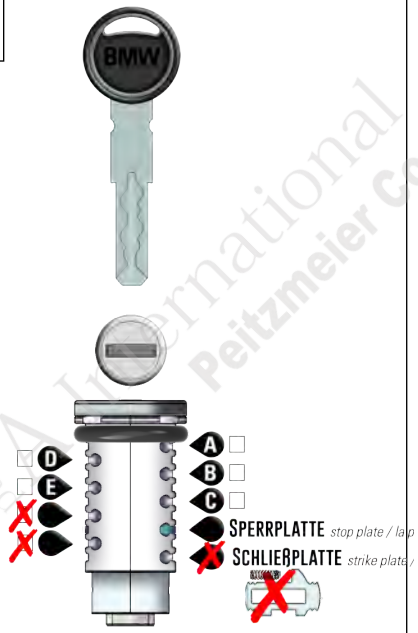

PA International Peitzmeier Co.


8


9


10
!


11

12



13



14

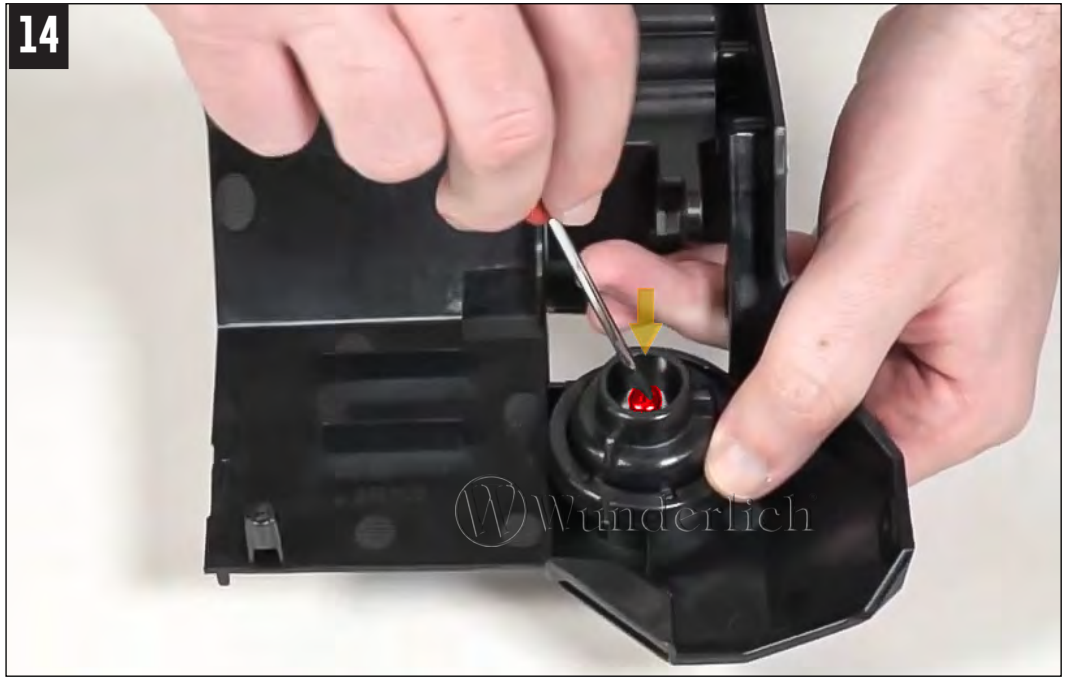

15



P&A International
Peitzmeier Co.

16



17



18



19

